| INVERTER MODEL LIST | |
|---|---|
| ITEM NO. | MODEL NUMBER |
| 1 | 3T603059 |
| 2 | |

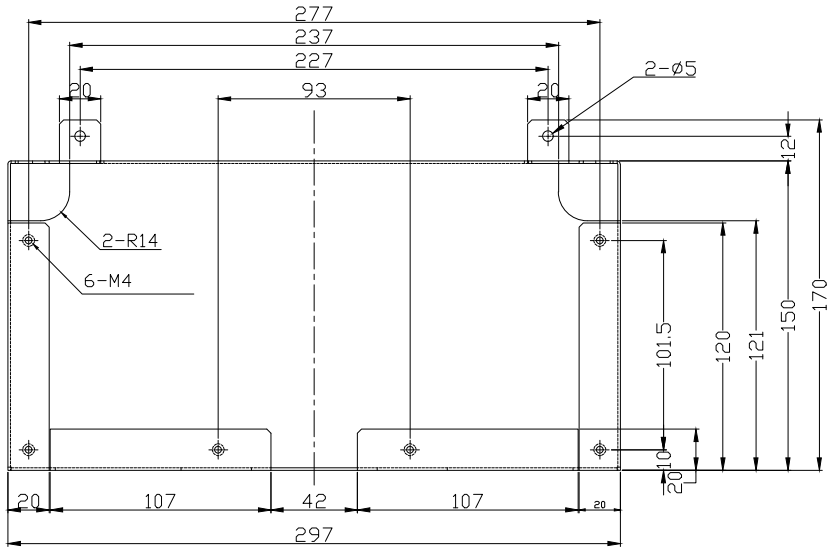


PROPRIETARY AND CONFIDENTIAL

THE INFORMATION CONTAINED IN THIS DRAWING IS THE SOLE PROPERTY OF HIESA. ANY REPRODUCTION IN PART OR AS A WHOLE WITHOUT THE WRITTEN PERMISSION OF HIESA IS PROHIBITED.

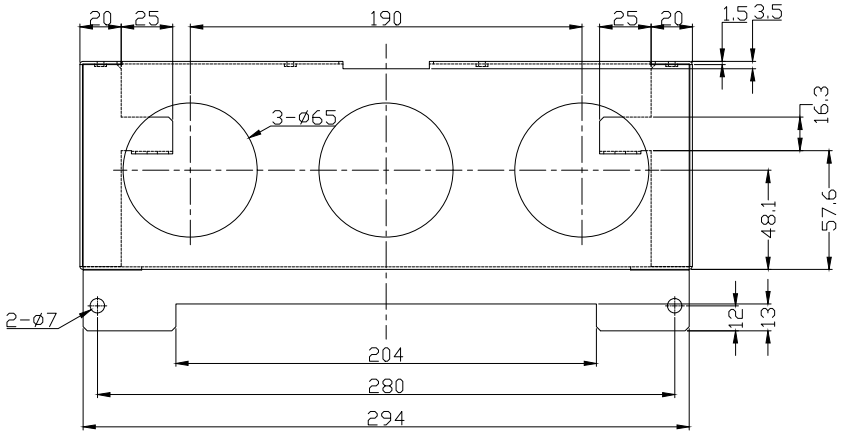


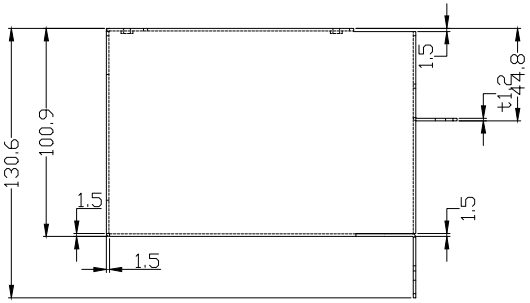


| UNLESS OTHERWISE SPECIFIED: | | NAME | DATE | HITACHI INDUSTRIAL EQUIPMENT & SOLUTIONS AMERICA LLC |
|---|---|---|---|---|
| DIMENSIONS ARE IN MM/INCHES<br>GENERAL TOLERANCES ACCORDING TO ISO 2768-mH-E | DRAWN | DBM | 23JAN19 | TITLE: 3T603059 PART 1 OF 2 P1-CB-D |
| | CHECKED | MIG | 17JAN22 | |
| | ENG APPR. | | | |
| | MFG APPR. | | | |
| INTERPRET GEOMETRIC TOLERANCING PER: | Q.A. | | | |
| MATERIAL | COMMENTS: | | | SIZE / DWG. NO. / REV A |
| FINISH | | | | SCALE: / WEIGHT: / SHEET 1 OF 1 |