CAD

VORTEX BLOWER
DIMENSIONS (UNIT mm)
MODEL : VB-110-E3

CYCLES (Hz)		50	60	PHASE	3
CAPACITY (m^3/min)		8.0	11.5	POLES	2
PRESSURE (kPa)		16.7	16.7	VOLTAGE (V)	200/200-220
SUCTION	MAX. OUTPUT (kW)	8.7	12.0	WEIGHT (kg)	140.0
	MAX. AMP'S (A)	36.2	42.5-40	INSULATION	E
	MAX. OPERATING PRESSURE (kPa)	26.5	29.5		
DISCHARGE	MAX. OUTPUT (kW)	11.0	15.0		
	MAX. AMP'S (A)	43	52-48.2		
	MAX. OPERATING PRESSURE (kPa)	32.0	32.5		
SHIELD-BALL BEARINGS		6309ZZ/6307ZZ			
PAINTING COLOR		MUNSEL 8.9Y 5.1/0.3			

(NOTES) NAME PLATE PPRESSURE UNIT : kPa

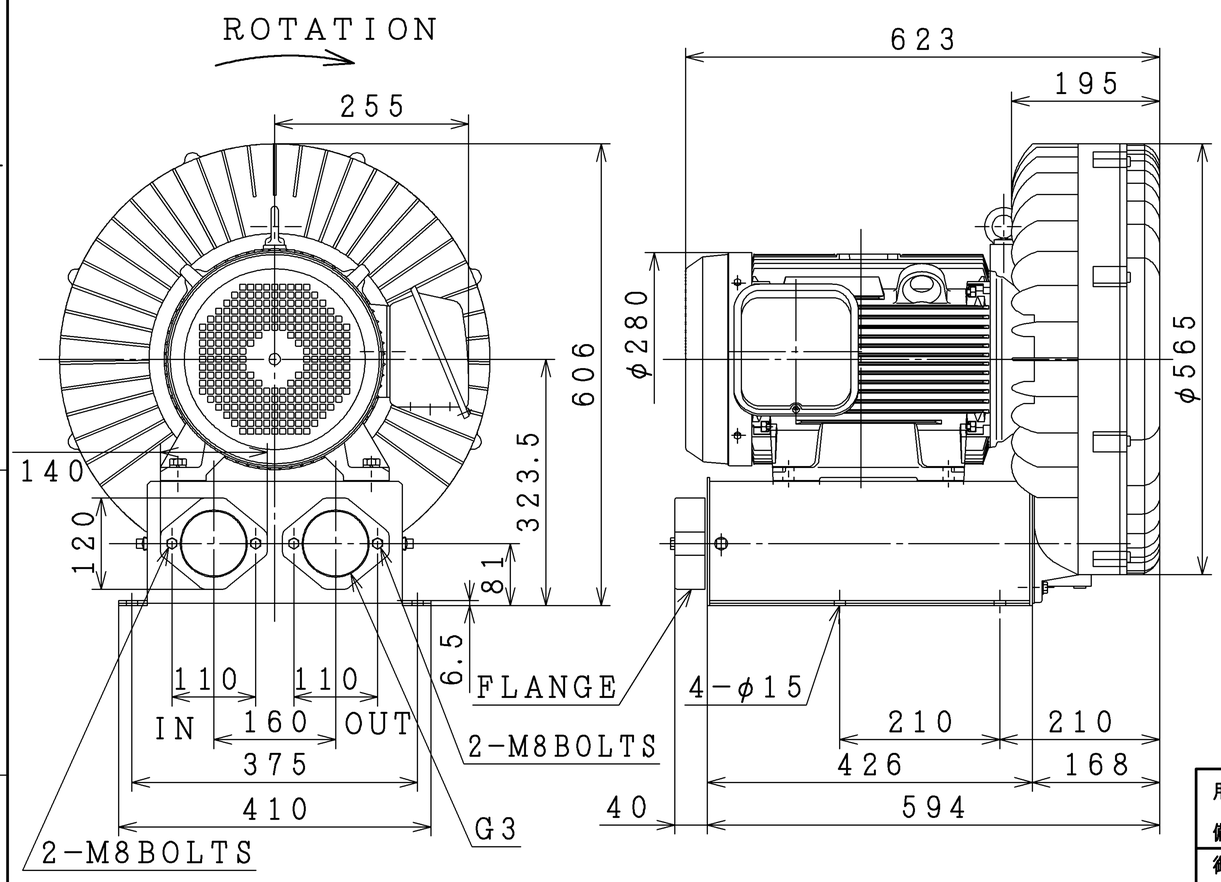

CHARACTERISTIC CURVES

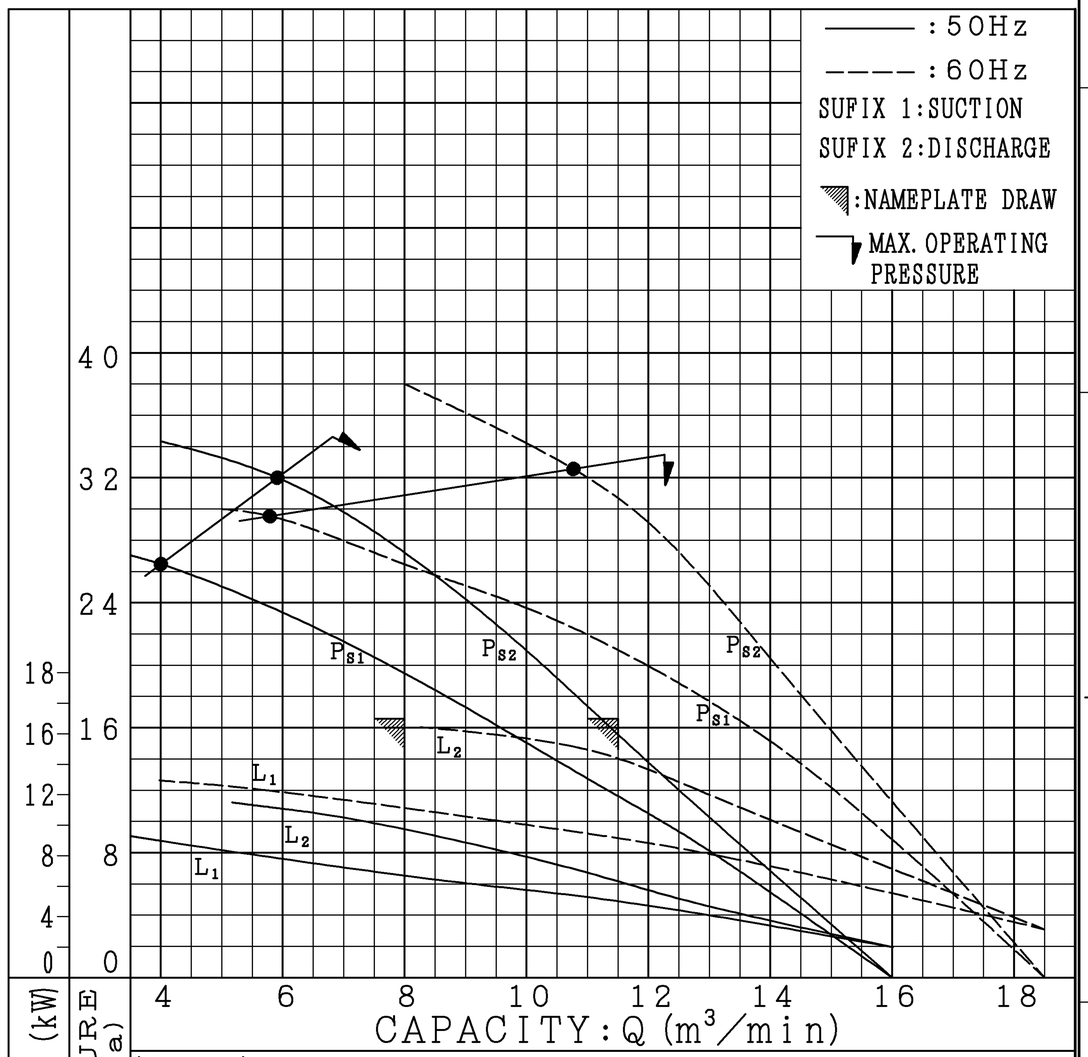

(Notes)
1. Atmospheric conditions equal 20℃ (68°F) at 29.92°Hg
2. Measurement taken with thermally stabilized. (Scattering : ±10%)
3. Continuous operation should be maintained under the max. operating pressure.

PROJECTION

用 途 USE

付属品 ACCESSORY

備 考 NOTICE Indoor installation

御注文主 CUSTOMER 殿

数量 QTY.

受注番号 ORDER No.

作業番号 WORK No.

REV.

REGD 2016.07.05				
DWN.	T. Itou	Jul·04·2016	寸 法 図 DIMENSIONS	Hitachi Industrial Equipment Systems Co., Ltd.
CHKD.	K. Iwata	Jul·05·2016		
APPD.	S. Takeda	Jul·05·2016		

NARASHINO WORKS DWG. No. 3243F803912

SH.

枠 番 FRAME SIZE