CAD

VORTEX BLOWER

DIMENSIONS

MODEL No. : VB-007SG-U

FREQUENCY (Hz)	60	PHASE	1
MAXIMUM VOLUME (cfm)	77.0	POLES	2
(m^3/min)	(2.2)	STANDARD VOLTAGE (V)	115/230
MAX. OPERATING DISCHAGE ("H_2O)	70.9	INSULATION CLASS	B
(Psi)	(2.6)	WEIGHT (LBS)	52.8
MAX. OPERATING VACUUM ("H_2O)	67.0	(kg)	(24.0)
(Psi)	(2.4)	OUTPUT (VACUUM) (HP/kW)	0.95/0.7

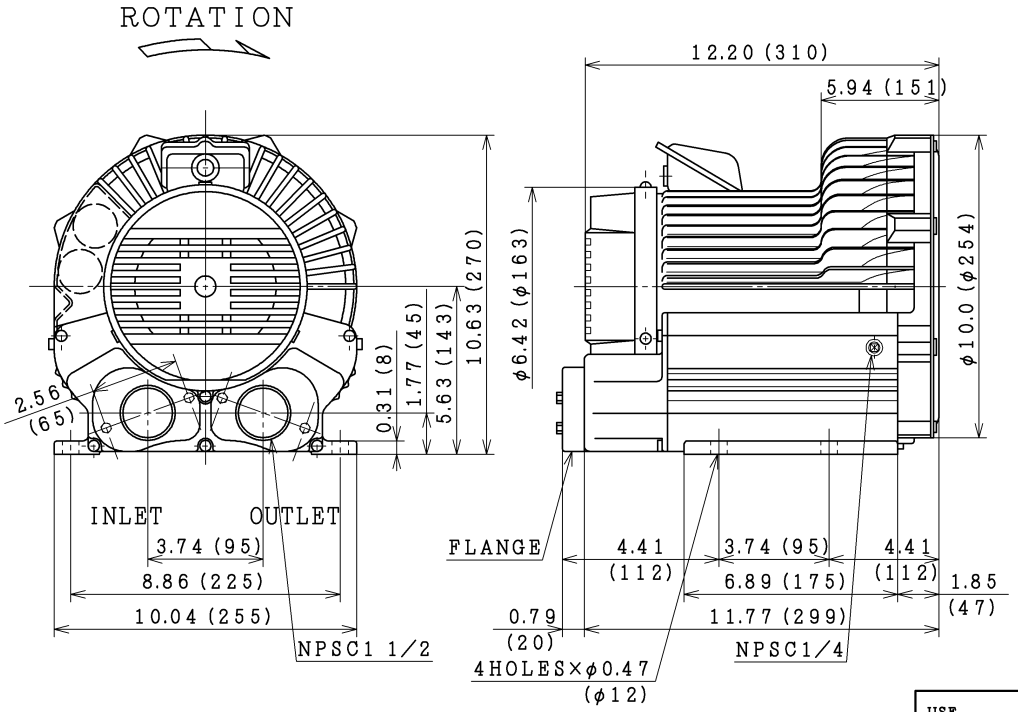

Unit: inches (millimeters)

CHARACTERISTIC CURVES

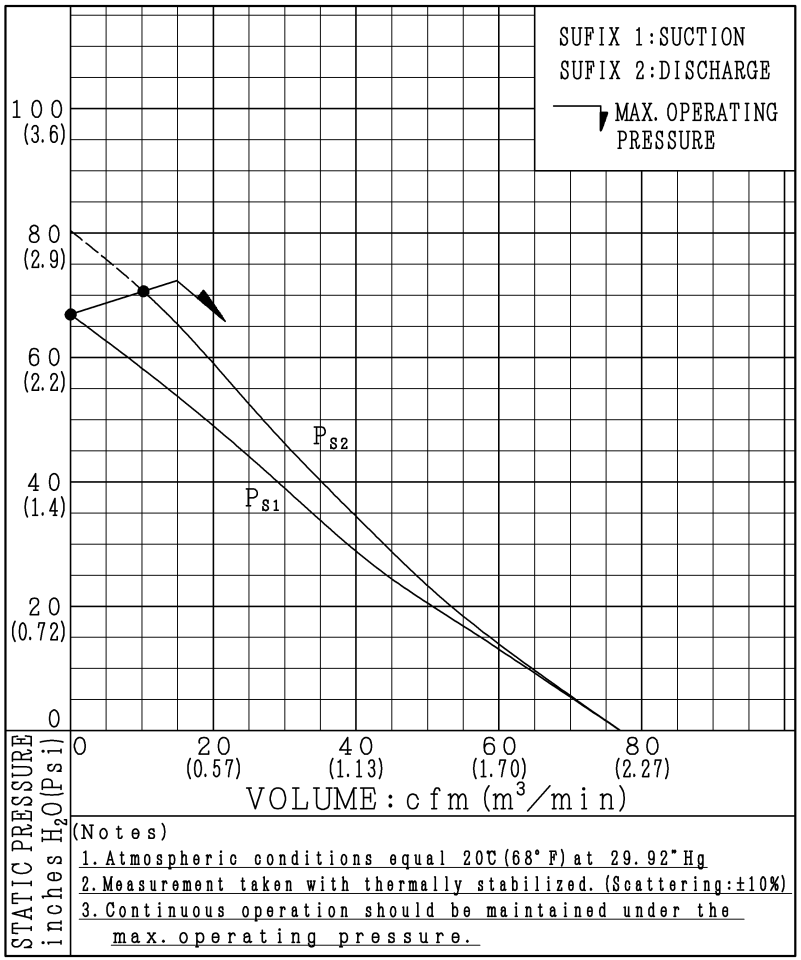

(Notes)
1. Atmospheric conditions equal 20℃ (68°F) at 29.92"Hg
2. Measurement taken with thermally stabilized. (Scattering: ±10%)
3. Continuous operation should be maintained under the max. operating pressure.

PROJECTION

USE		ACCESSORY			
NOTICE	Indoor installation				
CUSTOMER 殿	QTY.	ORDER No.	WORK No.		REV. 2
REGD 2007.03.15	DWN. T. Moritake Feb-01-2007	DIMENSIONS	Hitachi Industrial Equipment Systems Co., Ltd.	NARASHINO WORKS DWG. No. 3243F802693	
	CHKD. S. Takeda Feb-01-2007				
	APPD. F. ISHIDA Feb-01-2007				

FRAME SIZE