CAD

VORTEX BLOWER

DIMENSIONS

MODEL No. : VB-001SG-U

FREQUENCY (Hz)	60	PHASE	1
MAXIMUM VOLUME (cfm)	25.0	POLES	2
(m^3/min)	(0.7)	STANDARD VOLTAGE (V)	115/230
MAX. OPERATING DISCHAGE ("H_2O)	29.5	INSULATION CLASS	B
(Psi)	(1.1)	WEIGHT (LBS)	14.3
MAX. OPERATING VACUUM ("H_2O)	27.5	(kg)	(6.5)
(Psi)	(1.0)	OUTPUT (VACUUM) (HP/kW)	0.16/0.12

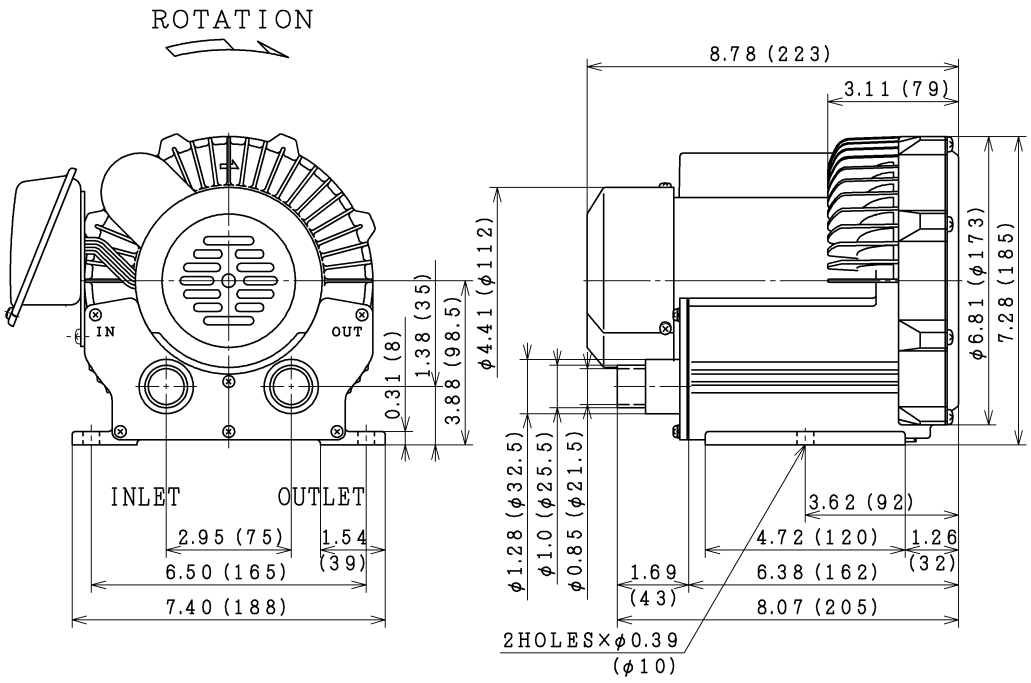

Unit: inches (millimeters)

CHARACTERISTIC CURVES

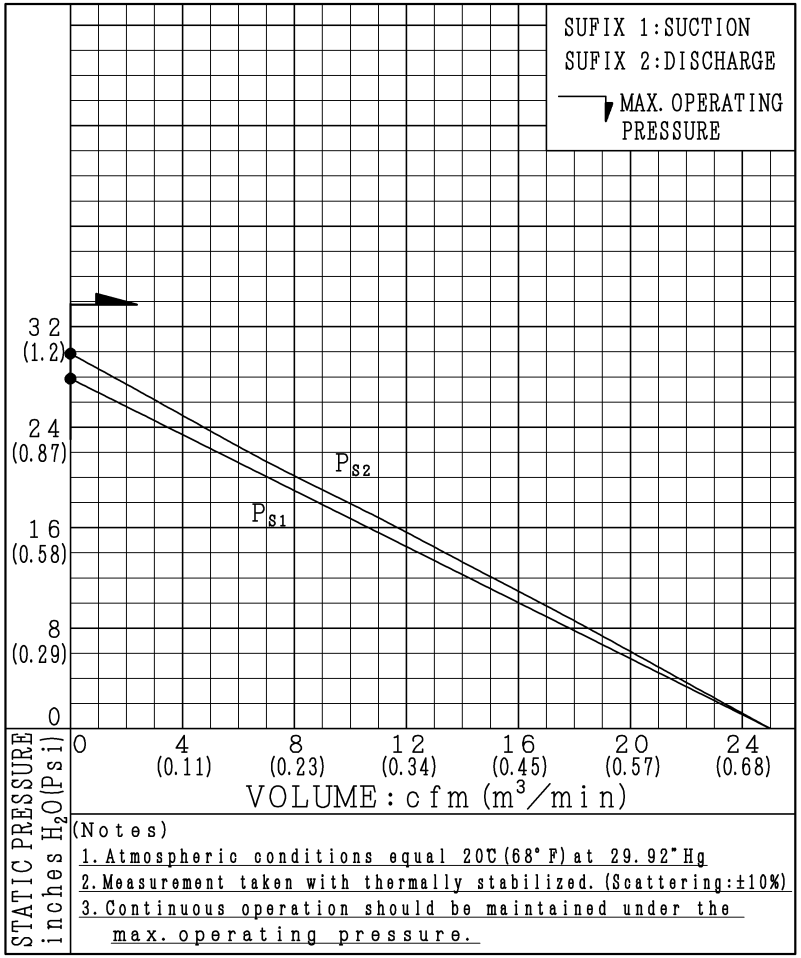

(Notes)
1. Atmospheric conditions equal 20℃ (68°F) at 29.92"Hg
2. Measurement taken with thermally stabilized. (Scattering: ±10%)
3. Continuous operation should be maintained under the max. operating pressure.

PROJECTION

USE		ACCESSORY			
NOTICE	Indoor installation				
CUSTOMER 殿	QTY.	ORDER No.	WORK No.	REV. 2	
REGD 2007.03.15	DWN. T. Moritake Feb-01-2007 / CHKD. S. Takeda Feb-01-2007 / APPD. F. ISHIDA Feb-01-2007	DIMENSIONS	Hitachi Industrial Equipment Systems Co., Ltd.	NARASHINO WORKS DWG. No. 3243F802689	

FRAME SIZE