CAD

VORTEX BLOWER

DIMENSIONS (UNIT mm)

MODEL : VB-060-E3

CYCLES (Hz)		50	60	PHASE	3
CAPACITY (m^3/min)		4.0	6.5	POLES	2
PRESSURE (kPa)		13.2	13.2	VOLTAGE (V)	380-400-415/380-400-440
SUCTION	MAX. OUTPUT (kW)	4.0	6.3	WEIGHT (kg)	90.0
	MAX. AMP'S (A)	8.1-8.2-8.5	11.7-11.2-10.5	INSULATION	B
	MAX. OPERATING PRESSURE (kPa)	20.5	25.2		
DISCHARGE	MAX. OUTPUT (kW)	5.0	7.2		
	MAX. AMP'S (A)	9.7-9.6-9.8	13.4-12.8-11.7		
	MAX. OPERATING PRESSURE (kPa)	22.9	25.6		
SHIELD-BALL BEARINGS		6308ZZ/6306ZZ			
PAINTING COLOR		MUNSEL 8.9Y 5.1/0.3			

(NOTES) NAME PLATE PPRESSURE UNIT : kPa

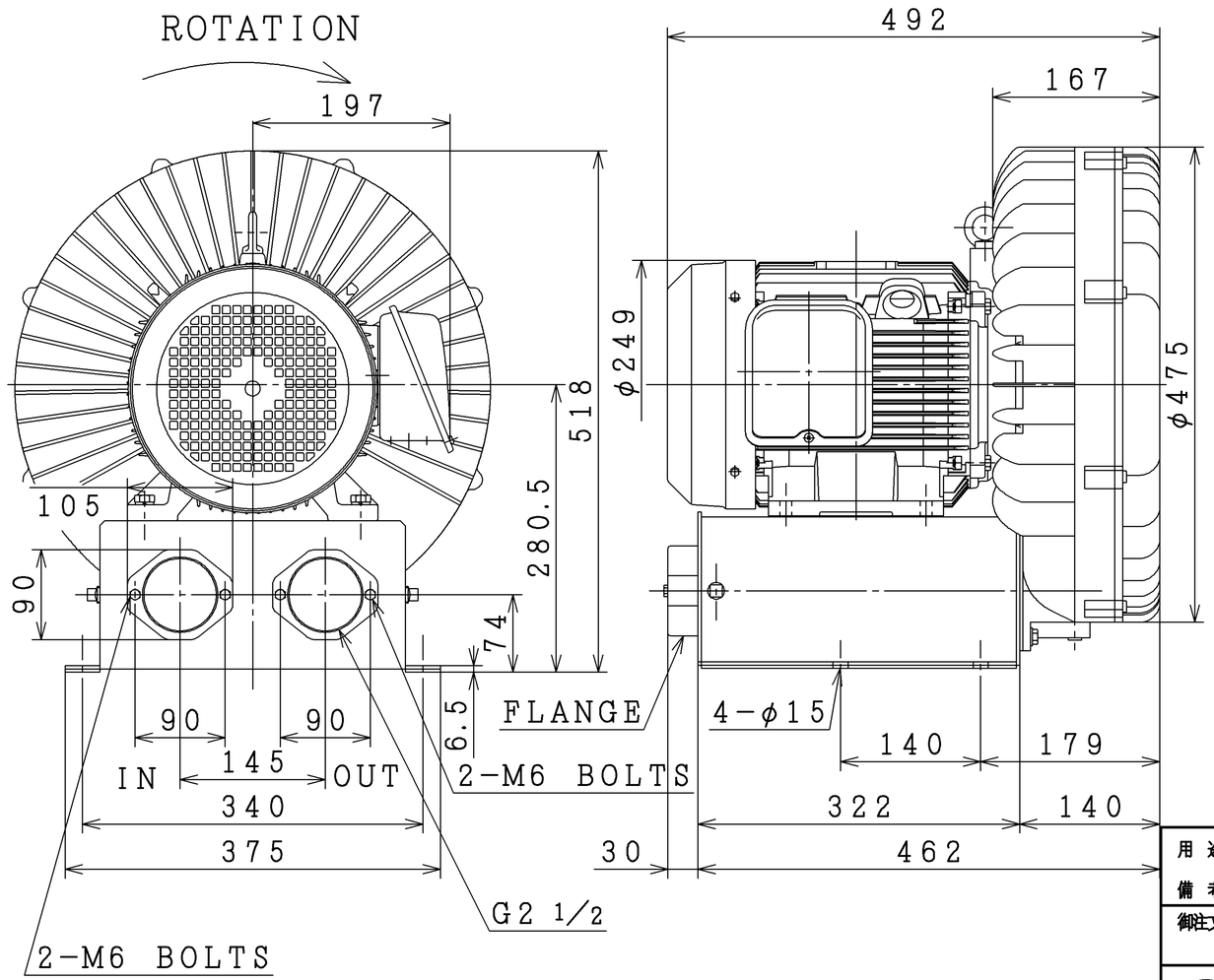

CHARACTERISTIC CURVES

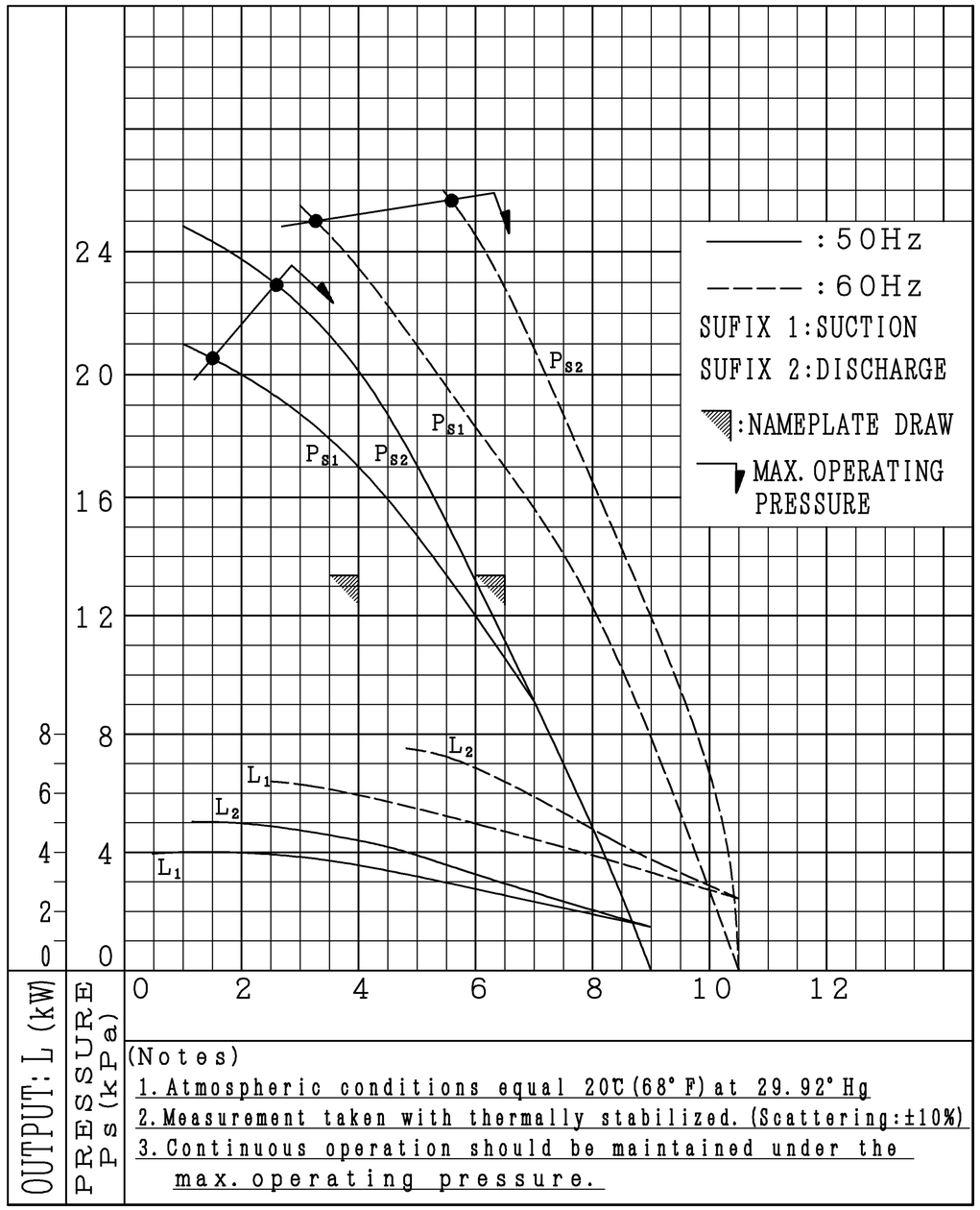

(Notes)

1. Atmospheric conditions equal 20℃ (68°F) at 29.92°Hg
2. Measurement taken with thermally stabilized. (Scattering : ±10%)
3. Continuous operation should be maintained under the max. operating pressure.

PROJECTION

用 途 USE

付属品 ACCESSORY

備 考 NOTICE Indoor installation

御注文主 CUSTOMER 殿

数量 QTY.

受注番号 ORDER No.

作業番号 WORK No.

REV.

REGD 2016.07.05				
DWN.	T. Itou	Jul·04·2016	寸 法 図 DIMENSIONS	Hitachi Industrial Equipment Systems Co., Ltd.
CHKD.	K. Iwata	Jul·05·2016		
APPD.	S. Takeda	Jul·05·2016		

NARASHINO WORKS DWG. No. 3243F803907

SH.

枠 番 FRAME SIZE