CAD

VORTEX BLOWER
DIMENSIONS (UNIT mm)
MODEL : VB-040-E3

CYCLES (Hz)		50	60	PHASE	3
CAPACITY (m^3/min)		3.0	4.5	POLES	2
PRESSURE (kPa)		11.8	11.8	VOLTAGE (V)	380-400-415/380-400-440
SUCTION	MAX. OUTPUT (kW)	2.5	3.5-3.6-3.6	WEIGHT (kg)	60.0
	MAX. AMP'S (A)	5.0-5.0-5.3	6.7-6.5-6.1	INSULATION	B
	MAX. OPERATING PRESSURE (kPa)	17.0	20.6		
DISCHARGE	MAX. OUTPUT (kW)	3.0	3.7-3.8-3.8		
	MAX. AMP'S (A)	5.9-5.9-5.9	7.1-6.9-6.4		
	MAX. OPERATING PRESSURE (kPa)	20.0	19.6		
SHIELD-BALL BEARINGS		6306ZZ/6306ZZ			
PAINTING COLOR		MUNSEL 8.9Y 5.1/0.3			

(NOTES) NAME PLATE PPRESSURE UNIT : kPa

ROTATION

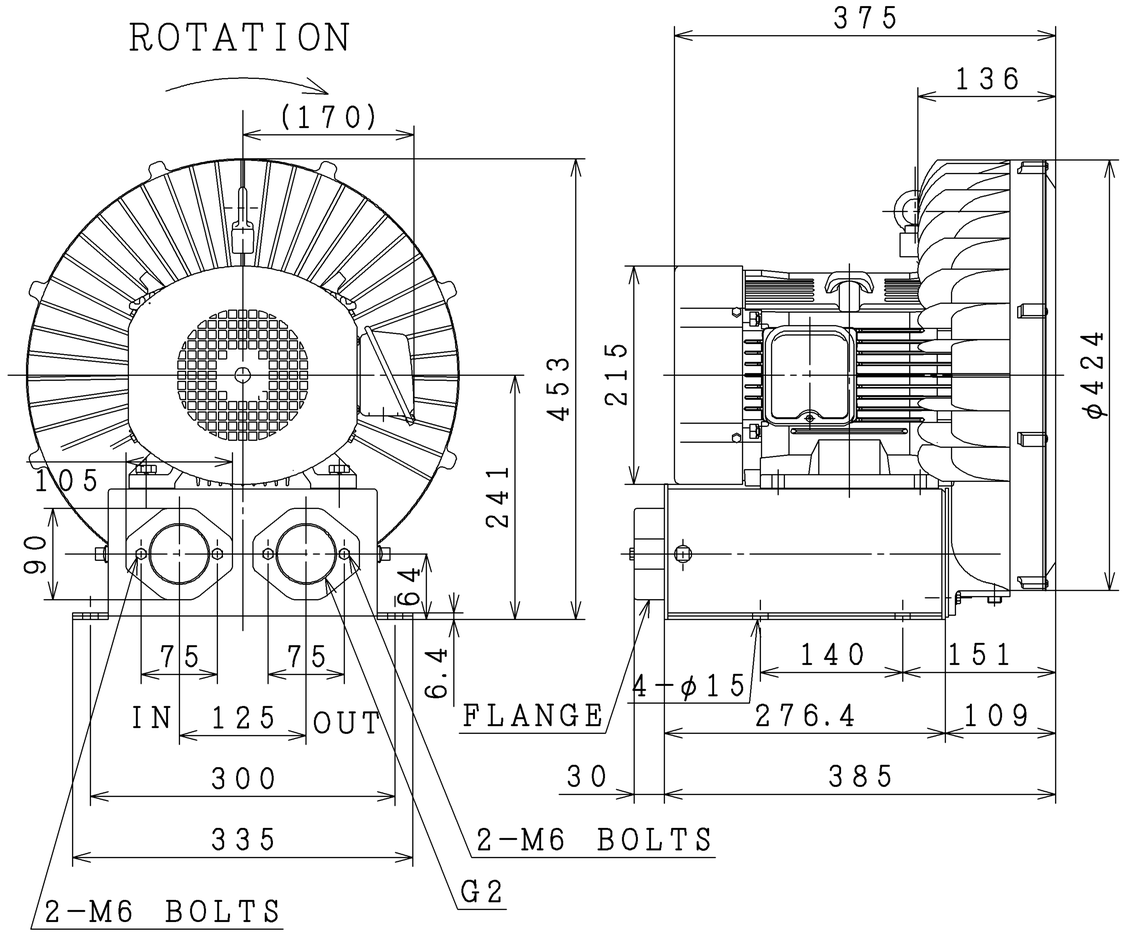

CHARACTERISTIC CURVES

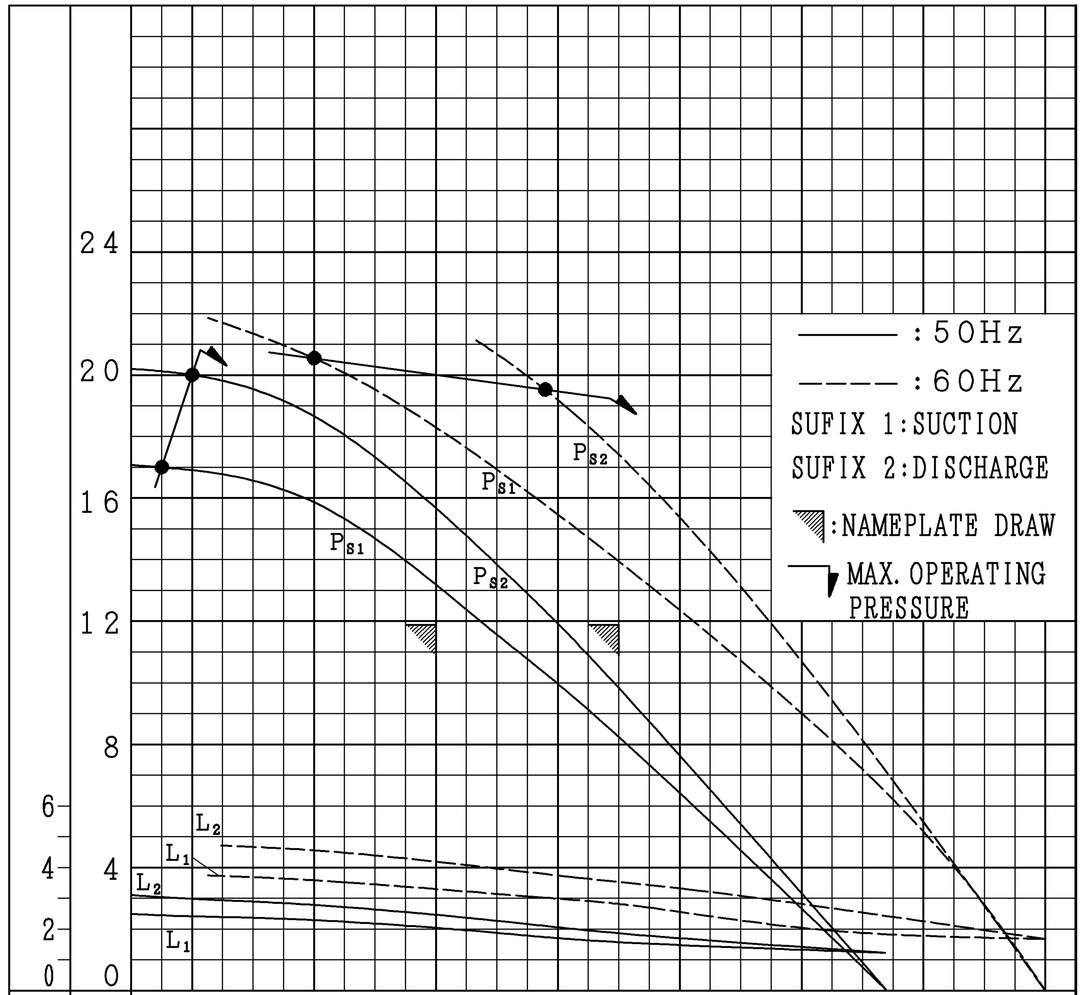

(Notes)
1. Atmospheric conditions equal 20℃ (68°F) at 29.92°Hg
2. Measurement taken with thermally stabilized. (Scattering : ±10%)
3. Continuous operation should be maintained under the max. operating pressure.

PROJECTION

用 途 USE

付属品 ACCESSORY

備 考 NOTICE Indoor installation

御注文主 CUSTOMER 殿

数量 QTY.

受注番号 ORDER No.

作業番号 WORK No.

REV.

REGD 2016.07.05

DWN.	T. Itou	Jul·04·2016
CHKD.	K. Iwata	Jul·05·2016
APPD.	S. Takeda	Jul·05·2016

寸 法 図
DIMENSIONS

Hitachi Industrial Equipment Systems Co., Ltd.

NARASHINO WORKS DWG. No. 3243F803904

SH.

枠 番 FRAME SIZE