CAD

VORTEX BLOWER

DIMENSIONS

MODEL No. : VB-007G-U

FREQUENCY (Hz)	60	PHASE	3
MAXIMUM VOLUME (cfm)	84.8	POLES	2
(m^3/min)	(2.4)	STANDARD VOLTAGE (V)	200-230/460
MAX. OPERATING DISCHAGE ("H_2O)	78.7	INSULATION CLASS	B
(Psi)	(2.8)	WEIGHT (LBS)	44.0
MAX. OPERATING VACUUM ("H_2O)	70.9	(kg)	(20.0)
(Psi)	(2.6)	OUTPUT (VACUUM) (HP/kW)	1.06/0.78

ROTATION

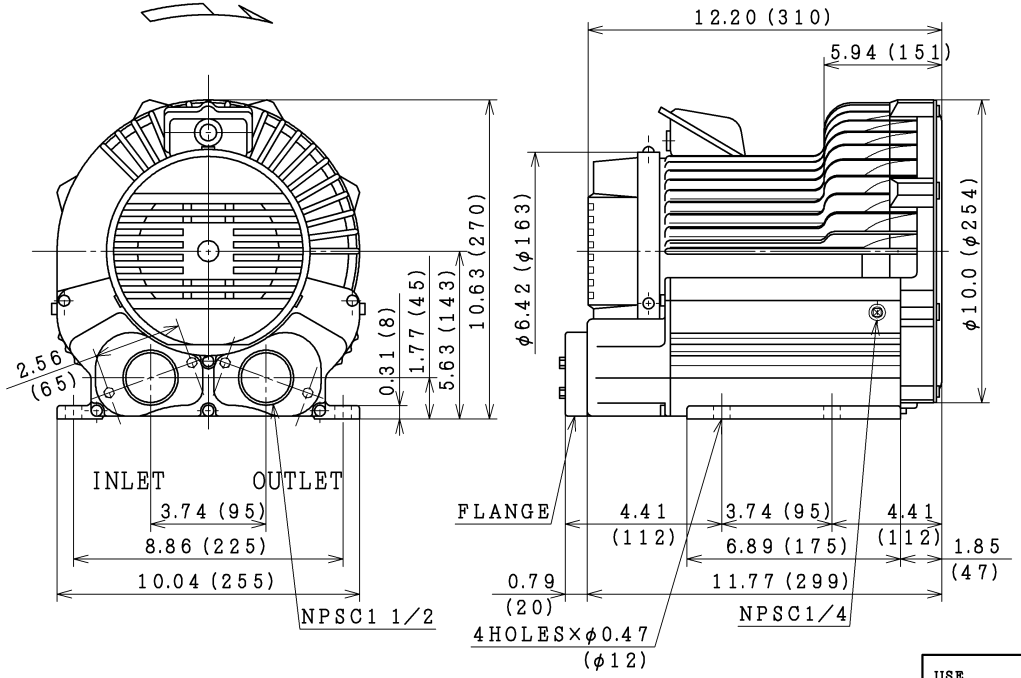

Unit: inches (millimeters)

CHARACTERISTIC CURVES

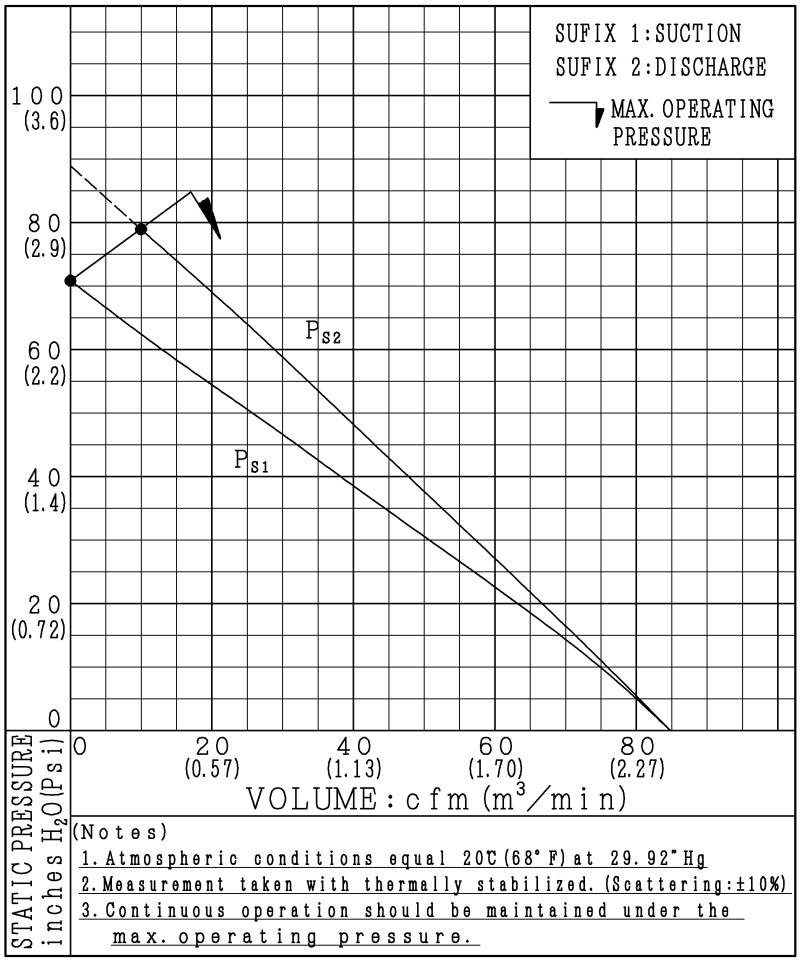

(Notes)
1. Atmospheric conditions equal 20℃ (68°F) at 29.92"Hg
2. Measurement taken with thermally stabilized. (Scattering: ±10%)
3. Continuous operation should be maintained under the max. operating pressure.

PROJECTION

USE		ACCESSORY			
NOTICE	Indoor installation				
CUSTOMER 殿	QTY.	ORDER No.	WORK No.		REV. 2
REGD 2007.03.15	DWN. T. Moritake Feb-01-2007 / CHKD. S. Takeda Feb-01-2007 / APPD. F. ISHIDA Feb-01-2007	DIMENSIONS	Hitachi Industrial Equipment Systems Co., Ltd.	NARASHINO WORKS DWG. No. 3243F802699	

FRAME SIZE